2020 IEEE REGION 10 CONFERENCE (TENCON)
Osaka, Japan, November 16-19, 2020

A Fault Detection Scheme for Reversible Circuits using -Ve Control k-CNOT Based Circuit

1st Mousum Handique
Department of CSE, TSSOT
Assam University
Silchar, Assam, India
mousum@iitg.ac.in

2nd Jantindra Kumar Deka
Department of CSE
Indian Institute of Technology Guwahati
Guwahati, Assam, India
jatin@iitg.ac.in

3rd Santosh Biswas
Department of EECS
Indian Institute of Technology Bhilai
Bhilai, Chhattisgarh, India
santoshbiswas402@yahoo.com

***Abstract*—The reversible logic circuit is a prominent research area for its low-power design, and also quantum computing. The development of synthesis and optimization is a well-known problem in the reversible circuits. For ensuring the high reliability and integrity performance of these circuits, the proper testing technique will be required to detect and locate the faults. In this paper, we consider the problem of reversible circuit testing, specifically targeting the fault detection for the missing-gate fault model in the k-CNOT based reversible circuit. It has been shown that n number of test vectors is sufficient for the detection of all single missing-gate faults (SMGFs), repeated-gate faults (RGFs), and partial missing-gate faults (PMGFs) of the proposed fault detection scheme in a reversible circuit with n inputs. Finally, we provide our experimental results based on several benchmark circuits and also show the comparative analysis with existing methods.**

***Index Terms*—Reversible circuit, complete test set, missing-gate fault model, testable reversible circuits**

I. Introduction

In conventional logic computation, the operations are logically irreversible, i.e., the output of each operation unable to uniquely defined the input, which causes lead to information loss and hence some mandatory power dissipation [1]. In contrast, the reversible logic performed the lossless information computation, and due to this effect energy dissipation is less than Landauer limit $kTln2$ Joules, where k is the Boltzmann constant, T is the temperature of the system in Kelvins, and $ln2$ is the natural logarithm of 2. Moreover, the reversible circuit is a higher-level abstraction of the quantum circuit, i.e., the reversible logic circuit is used to realize the boolean functionality of quantum circuits. It has motivated researchers to explore the reversible logic circuit as a circuit design alternative.

In every computing device, there may be a possibility to occur in an incorrect state during the computation. This incorrect state is considered a fault, and the occurrence of the fault(s) affects the functional behavior of a system. The fault model represents the physical description of these faults. More precisely, a fault model is generally used to abstract the effects of physical failures and also helps to simplify the complexity reducing the number of faults [2]. Several fault models have been introduced for the reversible circuit, where some of the fault models are common to the conventional logic circuits. The detailed discussion and connection between different fault models on the reversible circuit have been discussed in [3].

Test generation is the process of determining the input (or test) sequence that applies to a circuit for distinguishing the behavior between the fault-free and faulty circuit. A test set is a collection of input test vectors for detecting faults in a reversible circuit, and it is called as a complete test set if all possible faults can be detected under some assumed fault model. The test set generation process is relatively more straightforward for the reversible circuit case as compared to the conventional circuit because the property of reversibility ensures high controllability and observability [6]. It has also been postulated [4] that fault detection probability is highest when the information output of a circuit is maximized. This statement suggests that it may be easier to detect the faults in reversible circuits, where a number of inputs equal the number of outputs. Several works have been reported in the literature [6]–[14].

In this work, we have proposed a fault detection scheme for detecting the faults under the missing-gate fault model in the k-CNOT based reversible circuits. The proposed fault detection scheme targeted at one particular fault model, which can also be applied to detect the faults of another fault model. Finally, we have provided our experimental results to verify our proposed scheme.

The rest of the paper is organized as follows: Section II gives some necessary background of reversible logic function and gates especially targeting the NOT, CNOT, Toffoli and multi-control Toffoli (MCT) gates, k-CNOT based reversible circuit, fault models, and also provide an overview of the related work on fault detection in the reversible circuit. Section III describes our proposed fault detection method for detecting the faults. The experimental results are reported in Section IV. Finally, concluding remarks are presented in Section V.

II. Background

A. Reversible Logic Function and Gates

A logic function $f(x_1, x_2, \ldots, x_n)$ of n Boolean variables is called a reversible function if it realizes bijective functions, i.e., $f : \mathbb{B}^n \Rightarrow \mathbb{B}^m$ that map each possible input pattern to a unique output pattern, where the number of input patterns should be equal to a number of output patterns (i.e., $n = m$).

A logic gate is reversible if it realizes a reversible logic function. The formulation of a reversible gate consists of n-input and n-output lines ($n \times n$) such that input and output vectors are retrievable from each other. In reversible circuit design, several reversible gates have been proposed in the literature like NOT gate, controlled-NOT (CNOT),

Authorized licensed use limited to: UNIVERSITY OF BATH. Downloaded on May 14,2021 at 08:04:03 UTC from IEEE Xplore. Restrictions apply.

or FEYNMAN gate [15], TOFFOLI gate [16] and multiple-control Toffoli gate (MCT) [16]. The most commonly used gate is multiple-control Toffoli gates (MCT), also known as k-CNOT gates. More precisely, the k-CNOT gate has k+1 inputs, k+1 outputs as represented as $MCT(C;t)$ where C is a set of k control connections $(c_1, c_2, \ldots, c_k)$ and one target connection t, which is the logical extension of the 2-CNOT (Toffoli) gate. In MCT gate, when all k positive (negative) control connections are denoted as • (○), which are set to '1'('0'), then the target output connection is inverted which denoted as ⊕. The symbolic representation and gate operation of these basic gates are depicted in Figure 1.(a) to (d).

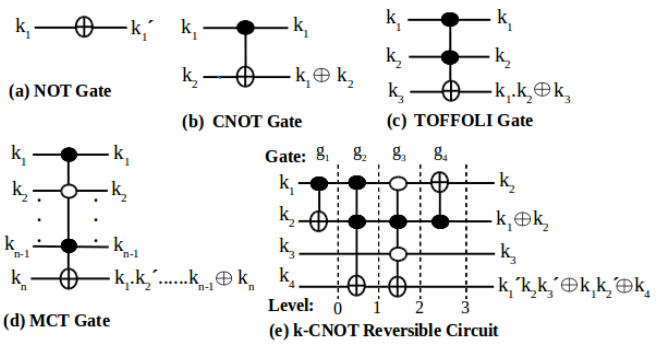

Fig. 1. Basic Reversible Gates and k-CNOT based Reversible Circuit

B. k-CNOT Reversible Circuits

A reversible logic circuit used to realizes the reversible logic function, and it can be implemented by a linear cascade of reversible gates [17], where fan-out and feedback connections are not directly allowed [5]. Given a reversible circuit C and set of gate G=$\{g_1, g_2, \ldots, g_N\}$ where N is the number of gates in the circuit C. Suppose, the gate g_i is an ith gate, for $1 \leq i \leq N$, then on g_i gate is active when the gate g_{i-1} has produced an output. If the reversible circuits are constructed using only the combinational of k-CNOT gates, it is called a k-CNOT based reversible circuit. Figure 1.(e) shows the structure of the k-CNOT circuit, where four signals (wires) with the four gates from g_1 to g_4 at their corresponding level 0 to level 3.

C. Fault Models in Reversible Circuit

The fault models help to evaluate faults and reduce the complexity of generating test vectors [3]. Apart from the traditional fault models, few more types of fault model need to be considered for describing the different kind of faults occurred in the reversible circuit. These specific kind of faults are Single Missing-Gate Fault (SMGF) [9], Multiple Missing-Gate Faults (MMGF) [9], Repeated-Gate Fault (RGF) [10], and Partial Missing-Gate Fault (PMGF) [10] under the Missing-Gate Fault model. In this section, we provide an overview of these faults with the help of the nth_Prime3_inc reversible benchmark circuit.

1) Single Missing-Gate Fault (SMGF): A single missing gate fault occurs when any one of the k-CNOT gates is completely disappeared from the circuit. Thus, removal of k-CNOT gate gives direct influences on the circuit functionality. Here, the total number of SMGFs is equal to a total

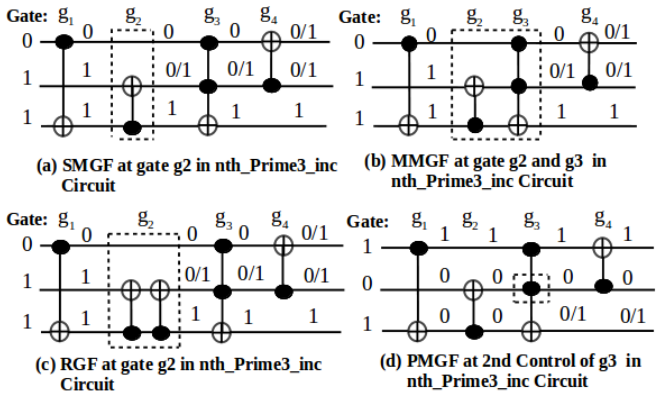

Fig. 2. Illustration of Reversible Circuit nth_Prime3_inc for various fault conditions under missing-gate fault model

number of gates N present in the circuit. In Figure 2.(a), the g_2 gate is missing, which is marked by a dotted box. If we apply input test vector $\langle 0\ 1\ 1 \rangle$ to the faulty circuit, the output would be $\langle 1\ 1\ 1 \rangle$ instead of normal primary output $\langle 0\ 0\ 1 \rangle$. Based on the k-CNOT gate operation, the SMGF can be detected by applying logic value 1 to the all positive control line (•), and unconnected and target line are set as logic value 0 or 1 of the missing k-CNOT gate in a given circuit.

2) Multiple Missing-Gate Faults (MMGF): Multiple missing gate faults (MMGF) causes the complete removal of two or more consecutive k-CNOT gates. Figure 2.(b) shows that g_2 and g_3 gates are missing which marked by the dotted box, and after applying the input test vector $\langle 0\ 1\ 1 \rangle$ the output vector would be $\langle 1\ 1\ 1 \rangle$ instead of $\langle 0\ 0\ 1 \rangle$. Furthermore, every SMGFs are a subset of MMGFs [10].

3) Repeated-gate Fault (RGF): A repeated-gate fault causes when an unwanted replacement of a k-CNOT gate by multiple instantiations of the same gate. The effect of RGF shows in Figure 2 (c), where the g_2 gate is repeated once more in the circuit. If we apply the input test vector $\langle 0\ 1\ 1 \rangle$ to the circuit, then the output of the fault-free circuit is $\langle 0\ 0\ 1 \rangle$, but due to the presence of RGF, the output would be $\langle 1\ 1\ 1 \rangle$. Based on the RGF model, if the repeated gate occurs by even numbers of instances of the same gate, then its effect is similar to the impact of SMGF; otherwise, the fault is redundant, i.e., does not change any functionality behavior of the circuit [10].

4) Partial Missing-Gate Fault (PMGF): A partial missing-gate fault occurs in the circuit when one or more control connections are missing. If any k-CNOT gate, the control connection is missing only once (k=1), then it is called as the first-order PMGF, and control connections are missing more than one ($k > 1$) then its referred as higher-order PMGF. Figure 2.(d) shows a first-order PMGF at the second control of the gate g_3 is missing. If we apply input test vector $\langle 1\ 0\ 1 \rangle$ then the faulty output would be $\langle 1\ 0\ 1 \rangle$ instead of normal output $\langle 1\ 0\ 0 \rangle$ due to the presence of PMGF at gate g_3. It has been shown [10] that the detection of a PMGF (first or higher-order), the logic value 0 is set at least one of the affected control connection and the logic value 1 is applied to all other control connection whereas remaining unconnected lines and target connection set as logic value 0

Authorized licensed use limited to: UNIVERSITY OF BATH. Downloaded on May 14,2021 at 08:04:03 UTC from IEEE Xplore. Restrictions apply.

or 1.

D. Related Work

Some of the existing works that are compatible with the present work are briefly reviewed in this section. In 2004, Hayes et al. [9] showed that all MGFs (considered one gate missing at a time) in N-gate k-CNOT based circuit is capable of detecting by one to $\lceil N/2 \rceil$ test vectors. Also, the DFT method by adding one wire, and several 1-CNOT gates for MGFs are detectable using a single test vector. In 2005, Polian et al. [10] presented to generate the optimal test sets computed by ILP for detecting in different types of groups occur in the Missing-gate fault model. In 2008, Rahaman et al. [11] proposed an augmented k-CNOT circuit by adding only one extra line along with duplication of each k-CNOT gate provided a universal test set size $(n+1)$ is sufficient to detect all SMGFs along with another fault model RGFs and PMGFs. In 2011, Zamani et al. [12] proposed a technique named Ping-Pong testing that provided a test vector to the circuit and generated output considered the next vector to detect the SMGFs and RGFs. In 2014, Mondal et al. [13] proposed a Boolean difference method for detecting the SMGF in k-CNOT based reversible circuits. In 2016, Mondal et al. [14] proposed a fault detection scheme to detect and localize the faulty zone for the SMGF and first-order PMGFs for mixed-control based reversible circuits.

In this context, the present work generates the test set based on the fault detection technique of SMGF. Now, the proposed scheme is constructing the k-CNOT based augmented circuit, and the generated test set applies to the augmented circuit such that the generated test set for an SMGF fault model is also capable of detecting another fault model RGF and PMGF in a given reversible circuit.

III. Proposed Method

In this section, we provide a fault detection method for detecting the SMGF, RGF, and PMGF in the reversible circuits. The proposed method describes in three phases. The role of the first phase is to generate the complete test set for testing a circuit. In the second phase, constructs the augmentation of a k-CNOT based circuit such that the reconstructed circuit maintains the parity preserving property. In the third phase, the generated complete test set applies to the augmented circuit for evaluating the circuit is faulty or fault-free. Finally, we establish that the test set TS refers to the augmented circuit considered a testable circuit that is complete for detecting all possible SMGFs, RGFs, and PMGFs in a given reversible circuit. The following definitions are used in the subsequent discussion.

Definition 1: A test vector (TV) is a combination of binary inputs that are applied to a reversible circuit for testing. The binary inputs $\langle b_1\ b_2\ \ldots\ b_n \rangle$ is assigned to the input lines L=$\{L_1, L_2, \ldots, L_n\}$, where n is the number of input lines and b_n is the nth bit refers to the input line L_n of the reversible circuit.

Definition 2: The complete test set TS is the set of test vectors required to test all possible faults in the reversible circuit. Let the test set $TS = \{TV_1, TV_2, \ldots, TV_n\}$, for $1 \leq i \leq n$, TV_i = $\langle b_{1i}\ b_{2i}\ \ldots\ b_{ni} \rangle$, where b_{ni} is the nth bit of the ith test vector and $b_{ni} \in \{0, 1\}$.

A. Complete Test Set Generation Phase

At first, we provide a test set generation process for detecting all SMGFs in a reversible circuit. Next, based on the detection technique of RGF and PMGF, the generated test set is also capable of detecting all the RGF and PMGF. The basic idea for generating a complete test set is explained below.

Let us consider the test set $TS = \{TV_1, TV_2, \ldots, TV_n\}$. The first test vector TV_1 consists of first bit 0, followed by (n-1) number of consecutive 1's. The second test vector TV_2 consists of first bit 1 followed by a single 0 and followed by (n-2) number of consecutive 1's, i.e., the first bit of TV_1 is shifting one-bit position to the right and append 1 to the left. This process is continued for the next test vector TV_i, till we get the nth test vector TV_n that consists of (n-1) number of consecutive 1's followed by single 0 at the end of the bit position. The entire process of complete test set generation has shown as diagrammatically in Figure 3.

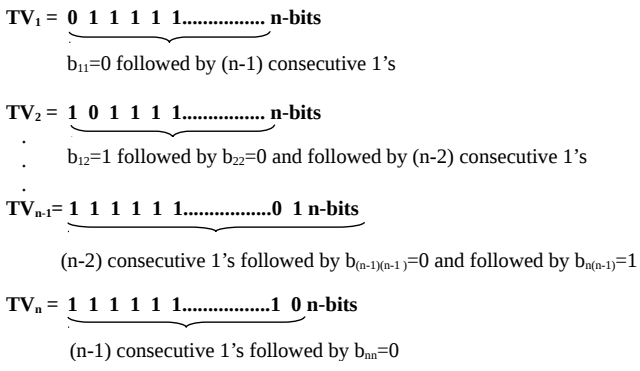

Fig. 3. Generation process of test set TS

Example 1: We consider the k-CNOT reversible circuit with n=4, then the test set $TS = \{TV_1, TV_2, TV_3, TV_4\}$, where TV_1=$\langle 0\ 1\ 1\ 1 \rangle$, TV_2=$\langle 1\ 0\ 1\ 1 \rangle$, TV_3=$\langle 1\ 1\ 0\ 1 \rangle$, and TV_4=$\langle 1\ 1\ 1\ 0 \rangle$.

B. Circuit Augmentation Phase

The main purpose of the circuit augmentation phase is to restore the same test vectors TV_i in set TS at the input of each k-CNOT gate that is lying in a subsequent level of the circuit for detecting the faults. Since the test vector TV_i changes to TV_l (maybe $TV_l \notin TS$) during each k-CNOT gate operation at their corresponding subsequent level of the circuit.

For constructing the testable reversible circuits, we are adding one extra line denoted as a L_e and set as logic value 0. Now, adding one additional k-CNOT gate after each of the original k-CNOT gates in the circuit with the same size of positive control and the target point. The newly added k-CNOT gate is connected with the negative control point at line L_e.

Lemma 1: The augmented circuit of k-CNOT gates maintains the parity preserving property.

Proof: The augmented k-CNOT circuit, test vector TV_i is applied to the initial input level that propagates to each original k-CNOT gate. The same test vector TV_i exists at the primary output level in the augmented circuit. Therefore,

Authorized licensed use limited to: UNIVERSITY OF BATH. Downloaded on May 14,2021 at 08:04:03 UTC from IEEE Xplore. Restrictions apply.

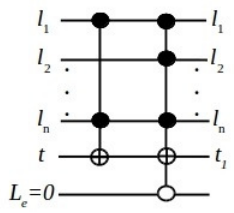

Fig. 4. Demonstration of an augmented k-CNOT Circuit

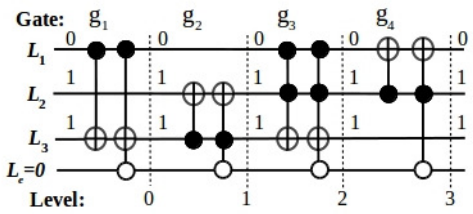

Fig. 5. augmented nth_Prime3_inc Reversible Circuit

the Exor sum of all the inputs and the primary outputs are equal to zero. To establish this fact, we consider a circuit as shown in Figure 4, and Exor sum for all initial inputs and primary outputs as follows:

$$\begin{aligned}
&[(l_1 \oplus l_2 \oplus \ \ldots \oplus l_n) \oplus t] \oplus [(l_1 \oplus l_2 \oplus \ \ldots \oplus l_n) \oplus t_1] \\
&= [(l_1 \oplus l_2 \oplus \ \ldots \oplus l_n) \oplus t] \oplus [(l_1 \oplus l_2 \oplus \ \ldots \oplus l_n) \\
&\quad \oplus \{(l_1.l_2 \ \ldots l_n) \oplus (\bar{0}.l_1.l_2 \ \ldots l_n) \oplus t\}] \\
&= [(l_1 \oplus l_2 \oplus \ \ldots \oplus l_n) \oplus t] \oplus [(l_1 \oplus l_2 \oplus \ \ldots \oplus l_n) \\
&\quad \oplus \{(l_1.l_2 \ \ldots l_n) \oplus (l_1.l_2 \ \ldots l_n) \oplus t\}] \\
&= [(l_1 \oplus l_2 \oplus \ \ldots \oplus l_n) \oplus t] \oplus [(l_1 \oplus l_2 \oplus \ \ldots \oplus l_n) \oplus t] = 0
\end{aligned}$$

Hence, the augmented k-CNOT circuit is parity preserving.

Example 2: Consider the reversible benchmark circuit nth_Prime3_inc consisting of four gates and three input lines constructed to the augmented circuit, as illustrated in Figure 5. The test vector TV_i=$\langle 0\ 1\ 1 \rangle$ applies to the circuit, and the same test vector TV_i is propagated to each level of the augmented circuit.

C. Fault Evaluation Phase

In the fault evaluation phase, the augmented circuit is now considered a testable circuit by applying the complete test set TS to detect the faults. It means that all the test vectors $TV_i \in TS$ are referring to the testable circuit, and if any fault occurs in the circuit, then applied test vector TV_i at the input level changes at the primary output level. In this contrast, the testable circuit generates the same test vector TV_i at the initial input and the primary output level while the circuit is fault-free. The evaluation of each fault describes with the help of the following examples.

Example 3: Let us consider the 3rd gate (g_3) that is, 2-CNOT gate is missing from the nth_Prime3_inc circuit which is representing as an SMGF as shown in Figure 6.(a). Here, the input line n=3, and according to the complete test generation phase, the test set $TS = \{TV_1, TV_2, TV_3\}$, where TV_1=$\langle 0\ 1\ 1 \rangle$, TV_2=$\langle 1\ 0\ 1 \rangle$, and TV_3=$\langle 1\ 1\ 0 \rangle$. If we apply TV_3 in TS to the testable circuit, then the testable circuit is generated the test vector $\langle 1\ 1\ 1 \rangle$ at the primary output level, which is different from the applied test vector TV_3. Therefore, there is a functional error in the testable circuit due to the SMGF at gate g_3.

Example 4: Consider the same nth_Prime3_inc reversible circuit, where the 3rd gate (g_3) is repeated once consecutively in the presence of RGF as depicted in Figure 6.(b). Similarly, if we apply the test vector TV_3 to the testable circuit as mentioned in Example 3, the generated output test vector is $\langle 1\ 1\ 1 \rangle$ at the primary output level of the circuit that is different from the input test vector TV_3. Therefore, the testable circuit shows a functional error due to the detectable RGF at gate g_3.

Example 5: Figure 6.(c) shows the PMGF model in nth_Prime3_inc reversible circuit, where the control point is missing of g_4 gate at line L_2. Let test vector TV_2=$\langle 1\ 0\ 1 \rangle$ be the input applied to the testable circuit and evaluate the test vector $\langle 0\ 0\ 1 \rangle$ at the primary output level of the circuit; it differs from the input test vector TV_2. Therefore, the testable circuit provides the information that the circuit is faulty due to the presence of first-order PMGF at gate g_4.

Lemma 2: In the testable k-CNOT based circuit, the generated test set TS is capable of detecting all the SMGFs and RGFs in a given reversible circuit.

Proof: Let us consider the test set for SMGF $TS = \{TV_1, TV_2, \ \ldots, TV_n\}$, where the size of any test vector (TV_i) is n; the number of the input line is L_n in a given reversible circuit. As per our earlier discussion, the detection criteria of an SMGF for each k-CNOT gate is that the logic value 0 set on the target line L_i and the logic value 1 is set on the remaining lines $L \setminus \{L_i\}$. The 1st test vector TV_1=$\langle 0\ 1\ 1\ \ldots 1\ 1\ 1\ \ldots \rangle$, contains b_{11}=0 followed by $(n-1)$ consecutive 1's. After applying the test vector TV_1, the first input 0 is provided to the first line L_1 and input 1 provides to the remaining $(n-1)$ lines. By this analogy, it is observed that the test vector TV_1 can detect the SMGF on k-CNOT gate where the line L_1 is the target line. Similarly, $(n-1)^{th}$ test vector TV_{n-1}= $\langle 1\ 1\ 1\ \ldots 1\ 1\ 1\ \ldots\ 1\ 0\ 1 \rangle$, contains $(n-2)$ consecutive 1's followed by $(n-1)^{th}$ bit position i.e., $b_{(n-1)(n-1)}$=0 which is followed by $b_{n(n-1)}$=1. Therefore, the test vector TV_{n-1} can detect the SMGF on k-CNOT gate where the line L_{n-1} is the target line. With the similar reasoning, the nth test vector TV_n=$\langle 1\ 1\ 1\ \ldots 1\ 1\ 1\ \ldots\ 1\ 1\ 0 \rangle$, contains $(n-1)$ consecutive 1's followed by n^{th} bit position b_{nn}=0. Due to this, the test vector TV_n is capable of detecting the SMGF on k-CNOT gate where the line L_n belongs to the target line. Also, the effects of detectable RGF is shown similar functional error has occurred in the SMGF model [10]. Therefore, the test set TS for SMGF is also a complete test set for RGF. Hence, the test set TS is the complete test set for detecting all the SMGFs and RGFs in a given k-CNOT based circuit.

Lemma 3: The test set TS is also capable of detecting all the PMGFs in a given reversible circuit while applying the testable k-CNOT based circuit

Proof: The detection criteria of the PMGF for each k-CNOT gate is that the logic value 0 set to the control line L_j where j^{th} control line is disappeared and set logic value 1 to the remaining lines $L \setminus \{L_j\}$. Let us consider the test set $TS = \{TV_1, TV_2, \ \ldots, TV_n\}$ as mentioned in Lemma 1. The 1st test vector TV_1 contains b_{11}=0 followed

Authorized licensed use limited to: UNIVERSITY OF BATH. Downloaded on May 14,2021 at 08:04:03 UTC from IEEE Xplore. Restrictions apply.

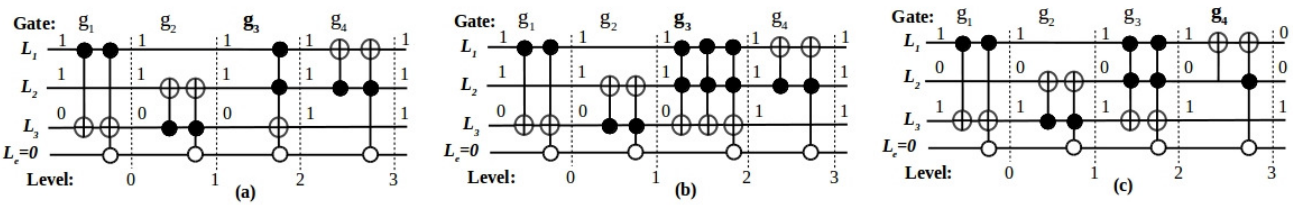

Fig. 6. nth_Prime3_inc testable Reversible Circuit: (a) SMGF at gate g_3 (b) RGF at gate g_3 (c) PMGF of g_4 at line L_2

by $(n-1)$ consecutive 1's. The test vector TV_1 can detect the PMGF of those k-CNOT gates, where the 1st control point is missing at line L_1. Similarly, the $(n-1)^{th}$ test vector TV_{n-1} contains $(n-2)$ consecutive 1's followed by single 0 i.e., $b_{(n-1)(n-1)}$=0 and followed by single 1 i.e., $b_{n(n-1)}$=1. So, the test vector TV_{n-1} detects the PMGF of those k-CNOT gates, where the $(n-1)^{th}$ control point is missing at line L_{n-1}. The nth test vector TV_n contains $(n-1)$ consecutive 1's followed by a single 0, i.e., b_{nn}=0. With a similar concept, it can be stated that the test vector TV_n can detect the PMGF of the k-CNOT gates, where the nth control point is missing at line L_n. Hence, the test set TS is capable of detecting all the PMGFs when it is applying to the testable k-CNOT based circuit.

IV. Experimental Results

The presented fault detection scheme has been implemented and evaluated on various k-CNOT based benchmark circuits [18]. The comparative analysis of our results with previous work in terms of the number of test vectors reported in [10], [12]–[14], as shown in Table I. The value '-' of Table I indicates that the results in the corresponding work are not available.

The experimental result in Columns 3 and 7 of Table I shows the comparison of the proposed work with the work of [10]. Based on the experimental results, it is observed that the circuit $2of5d1$, $hwb6tc$, and $hwb7tc$ are reducing the test set up to 45.45%, 62.50%, and 72%, respectively for detecting the faults when compared to [10]. On an average, the test size of the proposed method is 2.31% is less as compared to work in [10].

The comparison analysis of our result with the result of [12] is reported in Columns 4 and 7 of Table I. The average number of test set generated by our proposed method is 82.65% larger than the method proposed in [12], but our proposed method covers more number of faults. The highest reduction of 50% of the test set for the circuit $hwb7tc$ is achieved by the proposed method.

The results of our proposed method are compared with the work of [13], and the comparison result is shown in Columns 5 and 7 of Table I. As per our proposed approach, it is observed that the circuit $rd32$, $hwb4d1$, and $rd32d1$ are reducing the test set up to 33.33%, 42.85%, and 33.33%, respectively, for detecting the SMGF when compared to [13]. Also, the work in [13] can detect only SMGFs, but our proposed method is capable of detecting SMGFs, detectable RGFs, and PMGFs.

The comparison of our result with the result of [14] is reported in Columns 6 and 7 of Table I. The experimental result shows that the size of the test set produced by the proposed method for most of the circuits is comparable to the size of the test given by the method of [14]. On average, the test sets detecting all the faults SMGF, RGF, and PMGF of our method are 12.94% lesser than the test sets of the work of [14].

V. Conclusion

This paper introduced a fault detection scheme for detecting the SMGF, RGF, and PMGF in the k-CNOT based reversible circuit. First, it has been formally proved that n number of test vectors are required in a testable design k-CNOT based circuit to detect the SMGF. Then it is illustrated that the same n number of test vectors is sufficient for detecting the RGF and PMGF. The proposed fault detection scheme covers more faults than the methods available in the literature and still maintains 100% fault coverage. Also, based on the experiments performed on reversible benchmark circuits as reported in Table I, it is evident that the proposed method is scalable for large circuits.

As future work, the same fault detection concept may be attempted to detect another fault model like stuck-at and bridging faults in reversible circuits. More importantly, this work may be extended to detect the faults in the mixed polarity based k-CNOT circuit topology.

References

[1] R. Landauer, Irreversibility and heat generation in the computing process, IBM journal of research and development, vol. 5, no. 3, 1961, pp.183–191.

[2] N. K. Jha and S. Gupta, Testing of digital systems. Cambridge University Press, 2003.

[3] J. Rice, An overview of fault models and testing approaches for reversible logic, in Communications, Computers and Signal Processing (PACRIM), 2013 IEEE Pacific Rim Conference on. IEEE, 2013, pp.125–130.

[4] V. D. Agrawal, An Information Theoretic Approach to Digital Fault Testing, IEEE Transactions on Computers, vol.30, August 1981, pp.582–587.

[5] M. A. Nielson and I. L. Chuang, Quantum Computation and Quantum Information. Monograph Collection (Matt - Pseudo), 2000.

[6] K. N. Patel, J. P. Hayes, and I. L. Markov, Fault testing for reversible circuits, Computer-Aided Design of Integrated Circuits and Systems,IEEE Transactions on, vol. 23, no. 8, 2004, pp. 1220–1230.

[7] H. Rahaman, D. K. Kole, D. K. Das, and B. B. Bhattacharya, Optimum test set for bridging fault detection in reversible circuits, in Asian Test Symposium, 2007. ATS07. 16th. IEEE, 2007, pp. 125–128.

[8] M. Bubna, N. Goyal, and I. Sengupta, A DFT methodology for detecting bridging faults in reversible logic circuits, in TENCON 2007-2007 IEEE Region 10 Conference. IEEE, 2007, pp. 1–4.

[9] J. P. Hayes, I. Polian, and B. Becker, Testing for missing-gate faults in reversible circuits, IEEE Asian Test Symposium, pp. 100–105, 2004.

[10] I. Polian, J. P. Hayes, T. Fienn, and B. Becker,A family of logical fault models for reversible circuits, IEEE Asian Test Symposium, pp.422–427, 2005.

Authorized licensed use limited to: UNIVERSITY OF BATH. Downloaded on May 14,2021 at 08:04:03 UTC from IEEE Xplore. Restrictions apply.

TABLE I
COMPARISON OF THE COMPLETE TEST SET TS WITH [10], [12], [13] AND [14]

Benchmark Circuit	No. of Inputs	No. of Test Vectors [10]	No. of Test Vectors [12]	No. of Test Vectors [13]	No. of Test Vectors [14]	No. of Test Vectors [Proposed]
		SMGF+MMGF+PMGF	SMGF+RGF	SMGF	SMGF+PMGF	SMGF+RGF+PMGF
ham3tc	3	3	3	3 or 4	4	3
3_17tc	3	3	2	2	4	3
rd32	4	3	-	6	-	4
4_49d3	4	-	-	4	-	4
hwb4d1	4	6	2	7	5	4
rd32d1	4	3	-	6	-	4
4_49tc1	4	5	-	-	-	4
Xor5d1	5	2	-	2	-	5
mod5d1	5	4	1	2	6	5
mod5d2	5	3	1	2	6	5
mod5d4	5	-	-	4	-	5
hwb5tc	5	9	-	-	-	5
2of5d1	6	11	-	-	-	6
5mod5tc	6	7	1	-	7	6
mod5adder	6	8	3	-	7	6
hwb6tc	6	16	8	-	7	6
2of5d2	7	4	3	-	8	7
ham7tc	7	4	4	-	8	7
hwb7tc	7	25	14	-	8	7
rd53d1	7	8	2	-	8	7
rd53d2	8	4	3	-	9	8
6symd2	10	4	2	-	11	10
rd73d2	10	4	3	-	11	10
9symd2	12	-	-	-	-	12
rd84d1	15	-	-	-	-	15
Average		6.47	3.46	3.80	7.26	6.32

[11] H. Rahaman, D. K. Kole, D. K. Das, B. B. Bhattacharya, On the detection of missing-gate faults in reversible circuits by a universal test set, IEEE International Conference on VLSI design, pp. 163–168, 2008.

[12] M. Zamani, M. B. Tahoori, and K. Chakrabarty, Ping-pong test:Compact test vector generation for reversible circuits, IEEE VLSI Test Symposium, pp. 164–169, 2012.

[13] B. Mondal, D.K. Kole, D.K. Das, H. Rahman, Generator for test set construction of SMGF in reversible circuit by boolean difference method, in Proc. of 23rd IEEE Asian Test Symposium, pp. 68–73, 2014.

[14] B. Mondal, C. Bandyopadhyay, H. Rahaman A testing scheme for mixed-control based reversible circuits, in 6th International Symposium on Embedded Computing and System Design (ISED), issn no. 2473-9413, pp. 96–100, 2016.

[15] R.P. Feynman, Quantum mechanical computers, Foundation of Physics, Vol. 16, No. 6, pp.507–553, 1986.

[16] T.Toffoli, Reversible computing, In: J. Bakker, J. Leeuwen, (eds.) ICALP 1980, LNCS, Springer, Heidelberg, vol. 85, pp. 632–644, 1980.

[17] D. Maslov, Reversible logic synthesis, Ph.D. dissertation, Citeseer, 2003.

[18] D. Maslov, G. Dueck, and N. Scott, Reversible Logic synthesis Benchmark Page. www.cs.uvic.ca/ dmaslov/, 2004.

Authorized licensed use limited to: UNIVERSITY OF BATH. Downloaded on May 14,2021 at 08:04:03 UTC from IEEE Xplore. Restrictions apply.